2020「中技社科技獎學金」

2020 CTCI Foundation Science and Technology Scholarship

研究獎學金

Research Scholarship

複合式串接型轉換器於電網應用下之控制設計及評估

Design and Evaluation of a Control Scheme for the Hybrid Cascaded Converter in Grid Applications

國立清華大學 電機工程學系 博士班四年級 蘇昱丞

指導教授：鄭博泰 教授

CAPT Center for Advanced Power Technologies National Tsing Hua University, TAIWAN

國立清華大學 NATIONAL TSING HUA UNIVERSITY

研究重點

Compared with the well-known modular multilevel cascaded converter with single-star bridge-cells (MMCC-SSBC), the hybrid cascaded converter (HCC) has the advantage of the lower component count of power transistors and DC capacitors. Thereby, this research explores the HCC in grid applications and proposes a hierarchical control scheme which allows the HCC to operate under unbalanced grid conditions and power imbalances among all cells. The proposed control scheme begins with thorough power flow analysis on the HCC, and it is then designed following the hierarchical control structure developed in the earlier paper, while one more control, hybrid control, is added, becoming a four-layer hierarchical control scheme. Considering the unbalanced conditions, the proposed control scheme uses the zero sequence voltage as the means for managing the unbalanced power flows. Therefore, the proposed control scheme can achieve both the system current control and the DC capacitor voltage balancing control no matter the system is balanced or unbalanced. The HCC is further compared with the MMCC-SSBC under the unbalanced conditions at DC-side or AC-side to evaluate its performance. The proposed control scheme and the comparison are both confirmed experimentally. Finally, the operational flexibility and reliability of the HCC are also carefully discussed.

研究成果

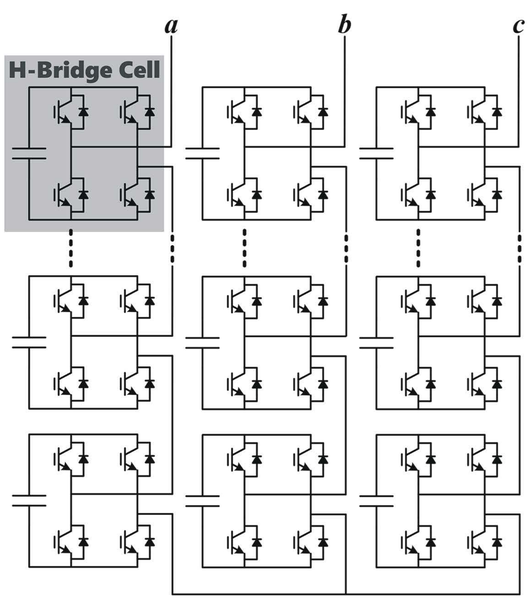

■ Topology of the SSBC

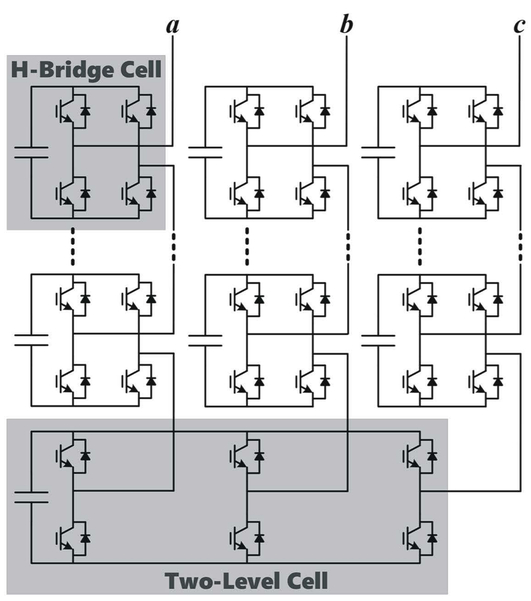

■ Topology of the HCC

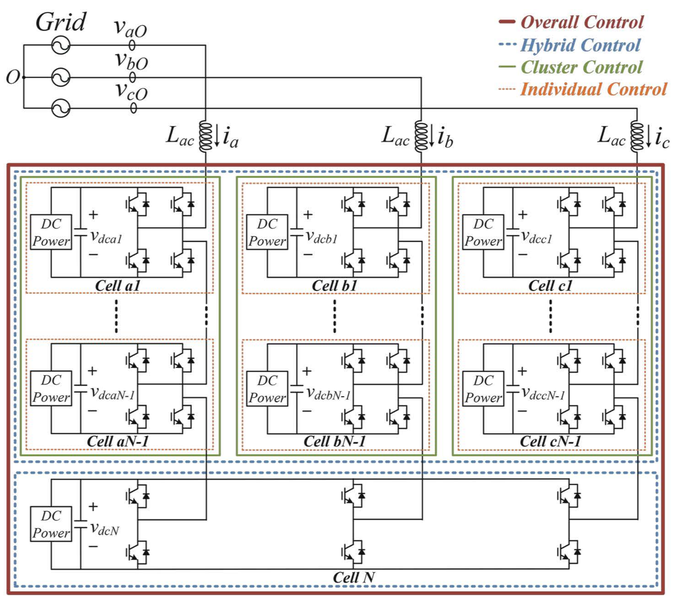

■ System configuration of the HCC in grid applications

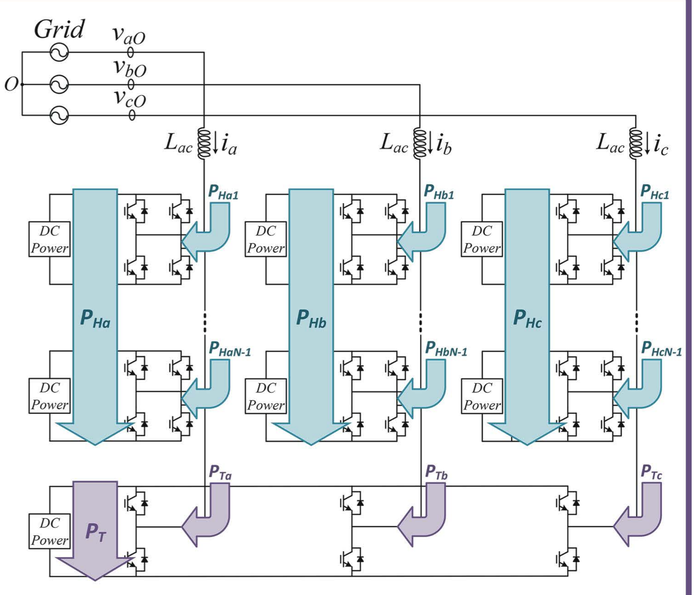

■ Schematic diagram of the power flows in the HCC

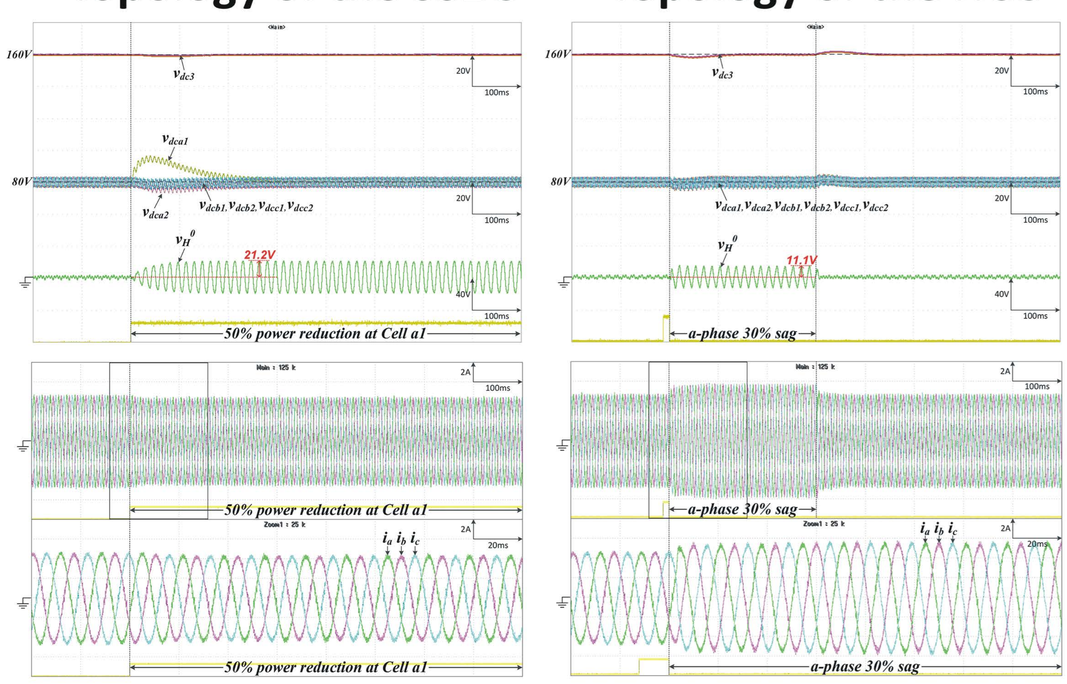

■ Waveforms tested under unbalanced conditions

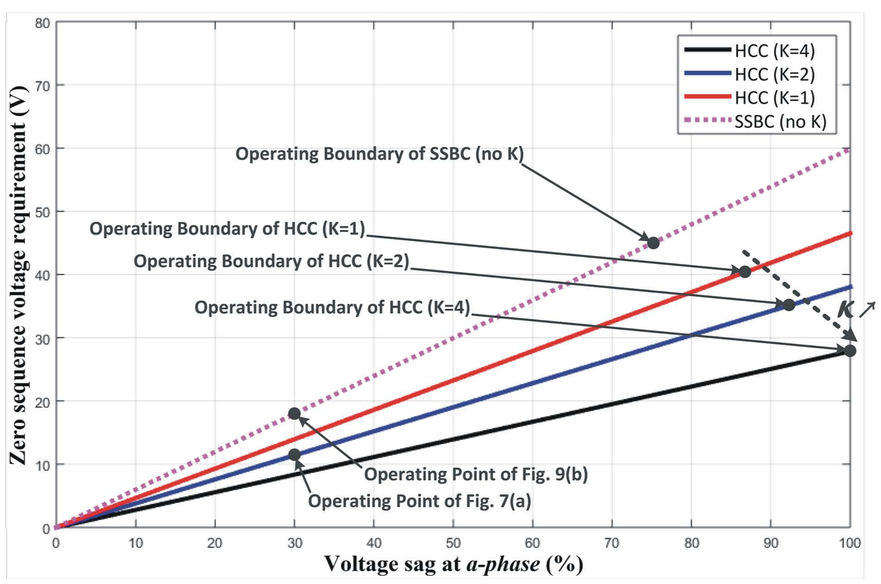

■ Graph of the operational reliability

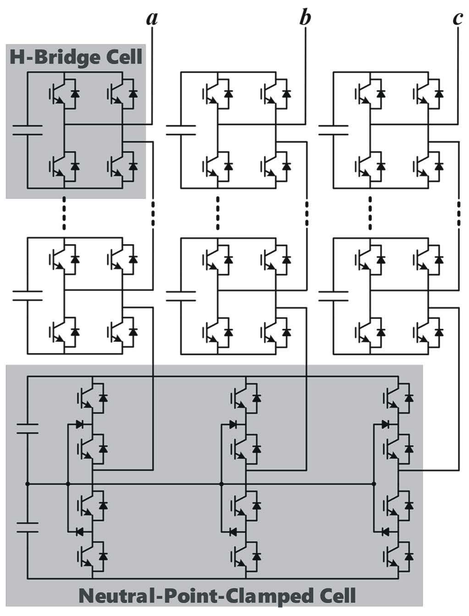

■ Alternative HCC

研究心得

十分開心這次能獲得中技社科技獎學金，並利用此次機會和國內各領域之優秀學者進行研究討論及交流。電力學門一直都不是國內特別熱門的研究領域，也因此這次能獲獎對我來說是個很大的鼓勵。特別感謝我的指導教授鄭博泰老師，在我研究路上提供的各種協助，同時也要感謝為了這次活動賣力付出的所有人員，大家都辛苦了！